USB 3.0 cable AB PREMIUM Quality 50cm

Product number BU-050-SW
Length 500mm

Product description

USB 3.0 cable, 50cm, PREMIUM quality, gold plated plugs, AWG28, double shielded, Super Speed Mode (max. 5Gbps), USB3 A plug male to USB3 B plug male, colour: black

Key features

- **USB 3.0 cable** type A to B
- Length: approx. 50cm
- CONNECTOR 1: **USB 3.0 A** plug (male)
- CONNECTOR 2: **USB 3.0 B** plug (male)
- Double overall cable shielding with braid + foil with drain wire
- inner conductor AWG28, copper (CU)
- Cable construction [(7x0.12 BC*1P)+ 7x0.12 BC+FAM]*2C+(7x12BC*1P)+7x12BC*2C+7x12BC+AEB(6X16X0.12AL)
- Outer jacket: PVC
- USB 3.0 **SuperSpeed** compatible
- Downward compatible with USB 2.0 and USB 1.1
- suitable for data transfer rates of up to **5 Gbit/s**
- as charging cable max. power of **15 W**
- Contact carrier in blue according to USB 3.0 standard
- Colour: black
- Cable diameter approx. 5mm
- e.g. for printers, servers, cameras, external USB hard drives
- Customs tariff number: 85444290
- Branded product
- CE, WEEE, RoHS compliant

More images

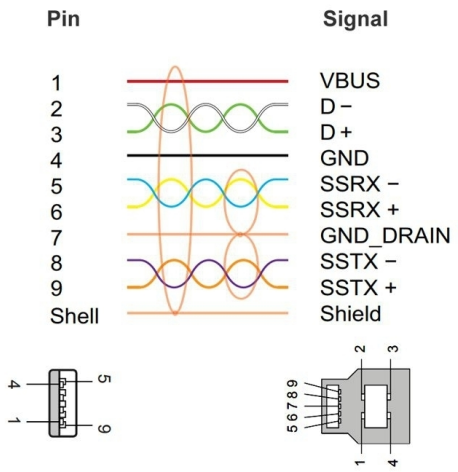
Pin
Signal
1 VBUS
2 D −
3 D +
4 GND
5 SSRX −
6 SSRX +
7 GND_DRAIN
8 SSTX −
9 SSTX +
Shell Shield

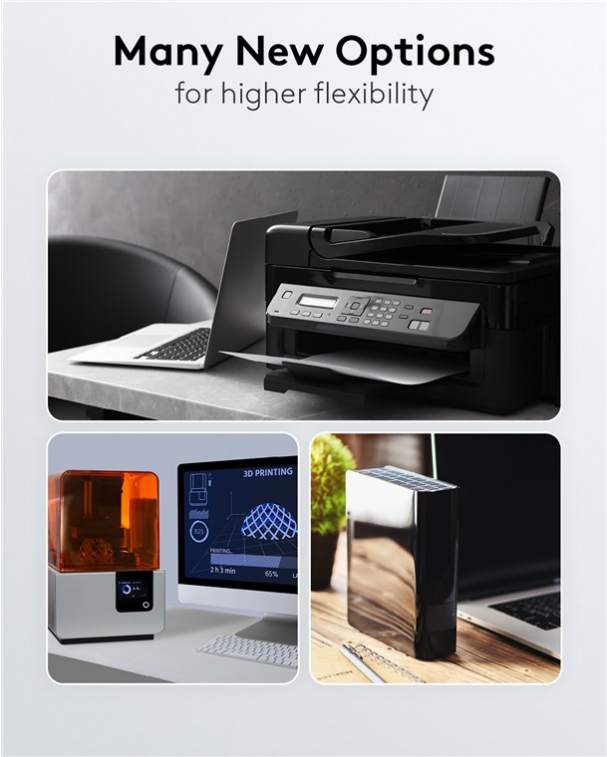
Many New Options
for higher flexibility
3D PRINTING

USB 3.0 Cable
USB-A plug to USB-B plug
Cable length
0.25 - 5 m
SuperSpeed up
to 5 Gbit/s
Double-
shielded
Compatible with
USB 2.0 & 1.1

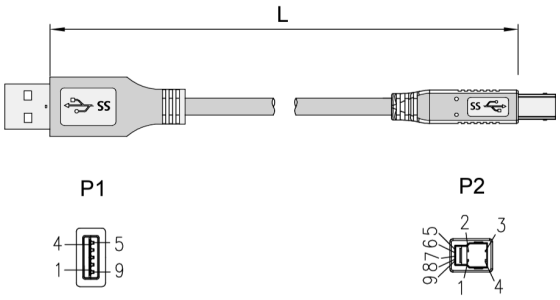
L
P1
P2
4
5
1
9
2
3
9 8 7 6 5
1
4

A
B

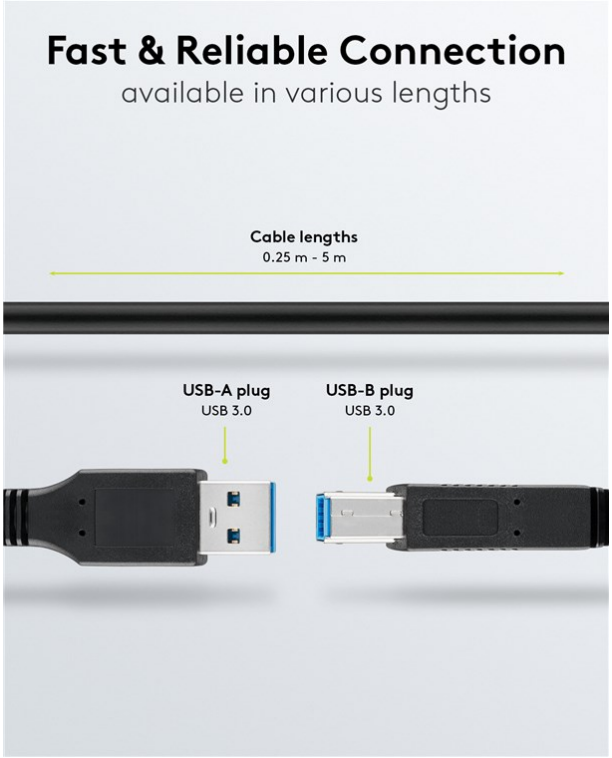
Fast & Reliable Connection
available in various lengths
Cable lengths
0.25 m - 5 m
USB-A plug
USB 3.0
USB-B plug
USB 3.0

Versatile Use
for a stable data connection
Computer & laptop
External hard drives
& other drives
Printers, scanners
& 3D printers
Audio interfaces
& MIDI devices
Docking stations
& USB hubs